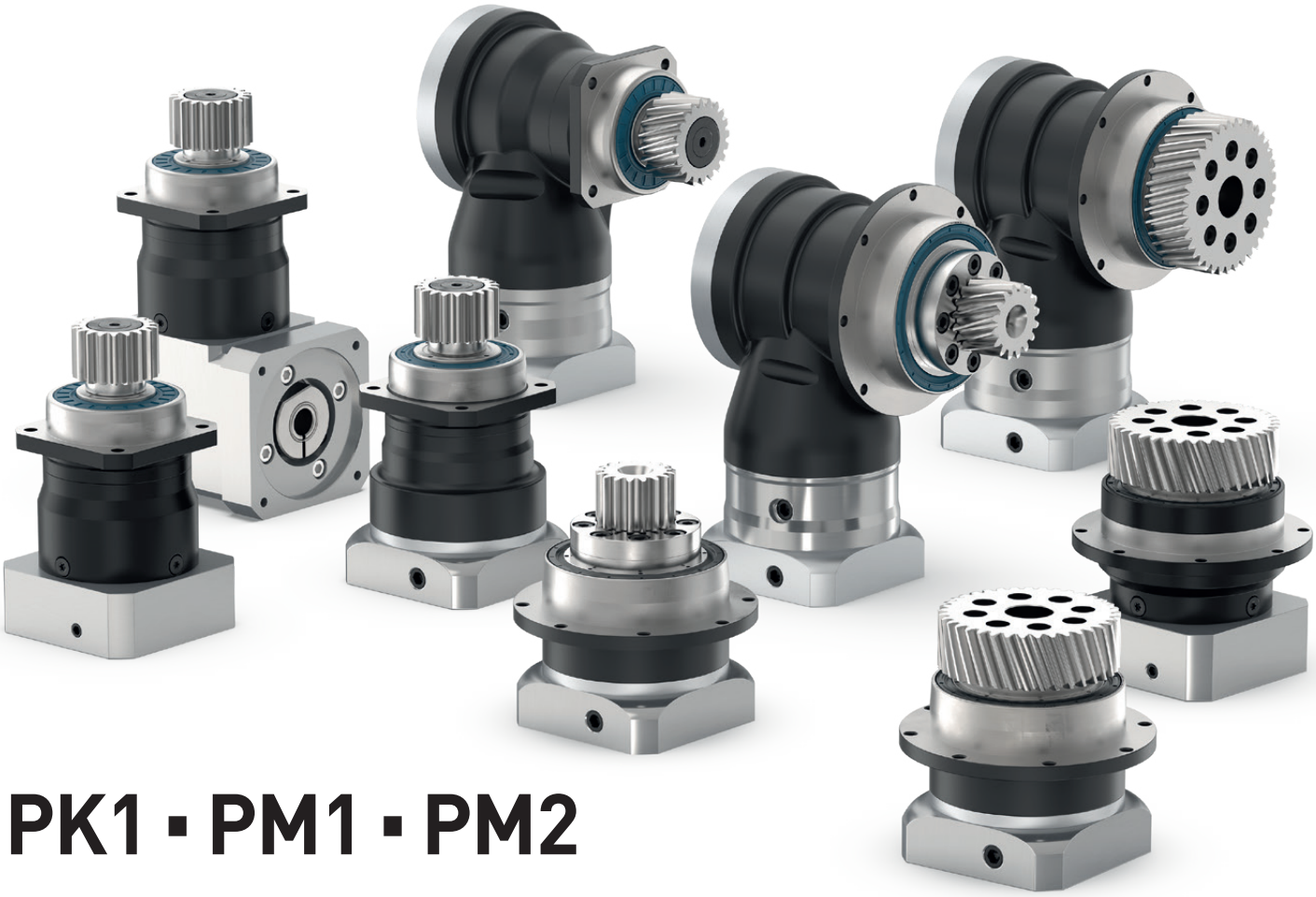

PK1 ▪ PM1 ▪ PM2

The integrated gearbox/pinion combination: Added value for your toothed rack applications.

The pinion is the essential element of the rack and pinion drive for converting the rotatory movement of the gearbox into a linear movement. The Neugart pinion is pre-mounted on the gearbox and secured with screws. This means that the compact unit consisting of the gearbox and the pinion can be quickly installed in the application, and less installation work is required.

PK 1 Pinion

Module	**2-5**
Number of teeth	**15-27**
Maximum feed force	**4-31 kN**

PM 1 Pinion

Module	**2-4**
Number of teeth	**26-45**
Maximum feed force	**2-14 kN**

Depending on the gearbox selected, the following features are available:

- Economy Line
- Precision Line
- Coaxial gearbox
- Right angle gearbox
- Pinion with straight teeth
- Pinion with helical teeth
- Preloaded tapered roller bearings
- Preloaded angular contact roller bearings
- Extra long centering collar
- Extra large round type output flange
- Square type output flange
- Rotary shaft seal
- Option: Reduced backlash

Detailed explanations of the technical features starting on page 173.

PM 2 Pinion

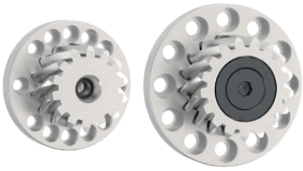

Module	**2-5**
Number of teeth	**16-22**
Maximum feed force	**7-30 kN**

Pinion with helical teeth

Helix angle β = -19,5283° (rising to the left)
Angle of pressure 20°
hardened and ground
Quality 6

Pinion type	Module	Number of teeth	Pitch circle diameter	Profile modification factor	Operating pitch circle diameter	Feed constant	Pinion weight	Max. torque	Max. feed force	Suitable for gearbox (1) (2)				
	m	z	d_0	x	d_W	$d_0 \times \pi$	m_P	T_{vmax}	F_V					
	mm		mm		mm	mm/U	kg	Nm	N					
PK1	2	15	31.831	0.55	34.03	100.00	0.16	90	5650	PSN070	PLN070	WPLN070	PLHE060	WPLHE060
PK1	2	16	33.953	0.55	36.15	106.67	0.18	103	6060					
PK1	2	18	38.197	0.45	40.00	120.00	0.23	141	7380					
PK1	2	18	38.197	0.45	40.00	120.00	0.21	141	7380	PSN090	PLN090	WPLN090	PLHE080	WPLHE080
PK1	2	20	42.441	0.45	44.24	133.33	0.27	183	8620					
PK1	2	22	46.686	0.45	48.49	146.67	0.33	218	9330					
PK1	2	23	48.808	0.45	50.61	153.33	0.32	229	9380	PSN115	PLN115	WPLN115	PLHE120	WPLHE120
PK1	2	25	53.052	0.45	54.85	166.67	0.39	250	9420					
PK1	2	27	57.296	0.35	58.70	180.00	0.46	275	9590					
PK1	3	20	63.662	0.45	66.36	200.00	0.69	534	16770					
PK1	3	20	63.662	0.45	66.36	200.00	0.77	534	16770	PSN142	PLN142	WPLN142	-	-
PK1	3	22	70.028	0.45	72.73	220.00	0.94	602	17190					
PK1	3	24	76.394	0.45	79.09	240.00	1.12	660	17270					
PK1	4	20	84.883	0.40	88.08	266.67	1.64	1295	30510	PSN190	PLN190	-	-	-

Pinion with straight teeth

Helix angle β = 0°
Angle of pressure 20°
hardened and ground
Quality 6

Pinion type	Module	Number of teeth	Pitch circle diameter	Profile modification factor	Operating pitch circle diameter	Feed constant	Pinion weight	Max. torque	Max. feed force	Suitable for gearbox (1) (2)				
	m	z	d_0	x	d_W	$d_0 \times \pi$	m_P	T_{vmax}	F_V					
	mm		mm		mm	mm/U	kg	Nm	N					
PK1	2	16	32.00	0.50	34.00	100.53	0.16	61	3810	PSN070	PLN070	WPLN070	PLHE060	WPLHE060
PK1	2	19	38.00	0.40	39.60	119.38	0.20	94	4940	PSN090	PLN090	WPLN090	PLHE080	WPLHE080
PK1	3	17	51.00	0.40	53.40	160.22	0.40	225	8820	PSN115	PLN115	WPLN115	PLHE120	WPLHE120
PK1	3	22	66.00	0.20	67.20	207.35	0.79	397	12030	PSN142	PLN142	WPLN142	-	-
PK1	4	19	76.00	0.30	78.40	238.76	1.32	712	18730					
PK1	4	22	88.00	0.20	89.60	276.46	1.71	986	22400	PSN190	PLN190	-	-	-
PK1	5	19	95.00	0.40	99.00	298.45	2.38	1481	31170					

(1) Application specific configuration with NCP.
More information about the gearboxes can be found on the product pages or at www.neugart.com
(2) The nominal output torque depends on the transmission ratio.

PK1 Pinion Dimensions

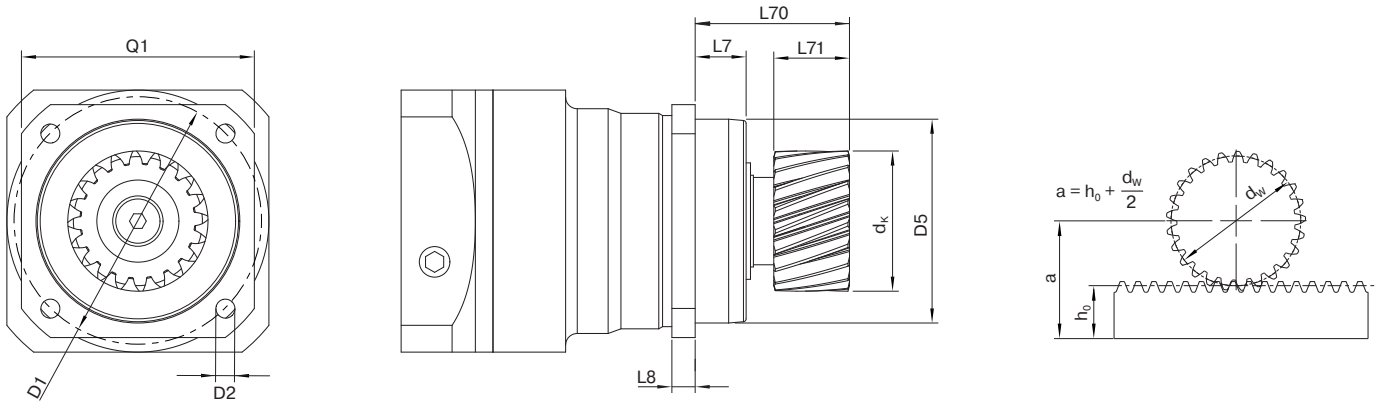

Pinion with helical teeth

Frame size	Pinion type	Module	Number of teeth	Tip diameter	Operating pitch circle diameter	Center distance[1]	Output shaft length with pinion	Pinion width	Centering depth	Flange thickness output	Pitch circle diameter	Mounting bore	Centering diameter	Flange cross section
		m	z	d_K	d_W	a	L70	L71	L7	L8	D1	D2	D5	Q1
		mm		mm	mm	mm	mm	mm	mm	mm	mm	mm	mm	mm
060 / 070	PK1	2	15	37.95	34.03	39.02	52	26	19	7	68-75	5.5	60 g7	70
	PK1	2	16	40.07	36.15	40.08	52	26	19	7	68-75	5.5	60 g7	70
	PK1	2	18	43.92	40.00	42.00	52	26	19	7	68-75	5.5	60 g7	70
080 / 090	PK1	2	18	43.92	40.00	42.00	53	26	17.5	8	85	6.5	70 g7	80
	PK1	2	20	48.16	44.24	44.12	53	26	17.5	8	85	6.5	70 g7	80
	PK1	2	22	52.40	48.49	46.24	53	26	17.5	8	85	6.5	70 g7	80
115 / 120	PK1	2	23	54.53	50.61	47.30	64	26	28	10	120	9.0	90 g7	110
	PK1	2	25	58.74	54.85	49.43	64	26	28	10	120	9.0	90 g7	110
	PK1	2	27	62.59	58.70	51.35	64	26	28	10	120	9.0	90 g7	110
	PK1	3	20	72.25	66.36	59.18	69.5	31	28	10	120	9.0	90 g7	110
142	PK1	3	20	72.25	66.36	59.18	81	31	28	12	165	11.0	130 g7	142
	PK1	3	22	76.62	72.73	62.36	81	31	28	12	165	11.0	130 g7	142
	PK1	3	24	84.99	79.09	65.55	81	31	28	12	165	11.0	130 g7	142
190	PK1	4	20	95.97	88.08	79.04	84	41	28	15	215	13.5	160 g7	190

Pinion with straight teeth

Frame size	Pinion type	Module	Number of teeth	Tip diameter	Operating pitch circle diameter	Center distance[1]	Output shaft length with pinion	Pinion width	Centering depth	Flange thickness output	Pitch circle diameter	Mounting bore	Centering diameter	Flange cross section
		m	z	d_K	d_W	a	L70	L71	L7	L8	D1	D2	D5	Q1
		mm		mm	mm	mm	mm	mm	mm	mm	mm	mm	mm	mm
060 / 070	PK1	2	16	37.92	34.00	39.00	52	26	19	7	68 -75	5.5	60 g7	70
080 / 090	PK1	2	19	43.52	39.60	41.80	53	26	17.5	8	85	6.5	70 g7	80
115 / 120	PK1	3	17	59.29	53.40	52.70	69.5	31	28	10	120	9.0	90 g7	110
142	PK1	3	22	73.09	67.20	59.60	81	31	28	12	165	11.0	130 g7	142
	PK1	4	19	86.29	78.40	74.20	84	41	28	12	165	11.0	130 g7	142
190	PK1	4	22	97.49	89.60	79.80	84	41	28	15	215	13.5	160 g7	190
	PK1	5	19	108.89	99.00	83.50	84	51	28	15	215	13.5	160 g7	190

[1] For standard toothed rack height h_0. Module 2 (h_0 = 22 mm), Module 3 (h_0 = 26 mm), Module 4 (h_0 = 35 mm), Module 5 (h_0 = 34 mm).

Pinion with helical teeth

Helix angle β = -19,5283° (rising to the left)
Angle of pressure 20°
hardened and ground
Quality 6

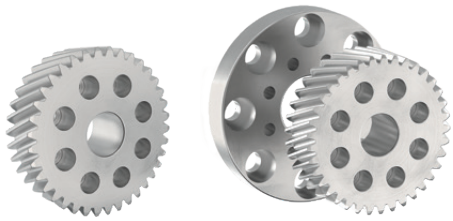

Pinion type	Module	Number of teeth	Ouptut flange (incl.)[3]	Pitch circle diameter	Profile modification factor	Operating pitch circle diameter	Feed constant	Pinion weight	Max. torque	Max. feed force	Suitable for gearbox[1][2]				
	m	z		d_0	x	d_W	$d_0 \times \pi$	m_P	T_{vmax}	F_V					
	mm			mm		mm	mm/U	kg	Nm	N					
PM1	2	26	–	55.174	0.40	56.77	173.33	0.43	81	2930	PSFN064	PLFN064	WPSFN064	PFHE064	3)
PM1	2	27	–	57.296	0.35	58.70	180.00	0.47	82	2860					
PM1	2	26	064 → 090	55.174	0.40	56.77	173.33	0.60	81	2930	PSFN090	PLFN090	WPSFN090	PFHE090	4)
PM1	2	27	064 → 090	57.296	0.35	58.70	180.00	0.64	82	2860					
PM1	2	35	064 → 090	74.272	0.35	75.67	233.33	1.00	90	2420					
PM1	2	37	–	78.517	0.35	79.92	246.67	0.89	176	4480	PSFN090	PLFN090	WPSFN090	PFHE090	3)
PM1	2	26	064 → 110	55.174	0.40	56.77	173.33	0.76	81	2930	PSFN110	PLFN110	WPSFN110	PFHE110	4)
PM1	2	27	064 → 110	57.296	0.35	58.70	180.00	0.79	82	2860					
PM1	2	35	064 → 110	74.272	0.35	75.67	233.33	1.16	90	2420					
PM1	2	40	–	84.883	0.35	86.28	266.67	0.94	312	7350	PSFN110	PLFN110	WPSFN110	PFHE110	3)
PM1	2	45	–	95.493	0.30	96.69	300.00	1.25	328	6860					
PM1	2	37	090 → 140	78.517	0.35	79.92	246.67	1.54	176	4480	PSFN140	PLFN140	WPSFN140	–	4)
PM1	3	31	090 → 140	98.676	0.35	100.78	310.00	2.40	193	3910					
PM1	3	35	–	111.409	0.35	113.51	350.00	2.18	783	14050	PSFN140	PLFN140	WPSFN140	–	3)
PM1	3	40	–	127.324	0.35	129.42	400.00	2.92	829	13020					
PM1	4	30	–	127.324	0.20	128.92	400.00	3.67	827	12990					
PM1	3	35	140 → 200	111.409	0.35	113.51	350.00	4.20	783	14050	PSFN200	PLFN200	–	–	4)
PM1	3	40	140 → 200	127.324	0.35	129.42	400.00	4.93	829	13020					
PM1	4	30	140 → 200	127.324	0.20	128.92	400.00	5.68	827	12990					

[1] Application specific configuration with NCP. More information about the gearboxes can be found on the product pages or at www.neugart.com
[2] The nominal output torque depends on the transmission ratio.

[3] Direct mounting of the pinion

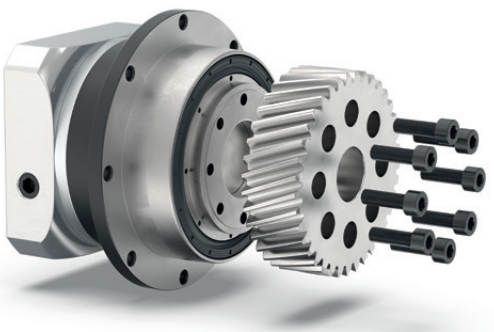

PSFN090 with PM1 pinion for gearbox frame size 090

[4] Use of an adapter flange for installing the pinion

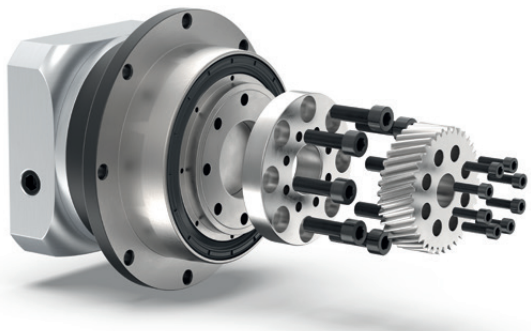

PSFN090 with adapter flange (064 → 090) and PM1 pinion for gearbox frame size 064

Frame size
064, 090 and 110

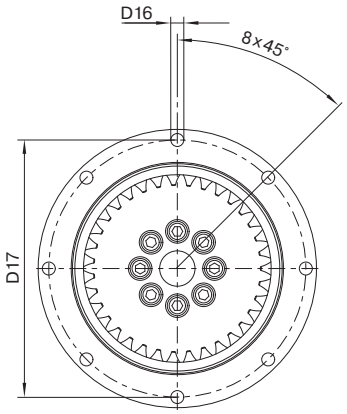

Frame size
140 and 210

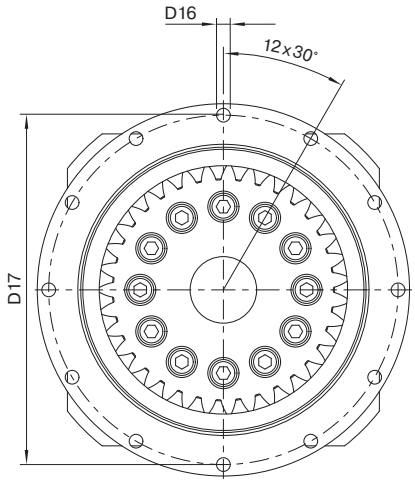

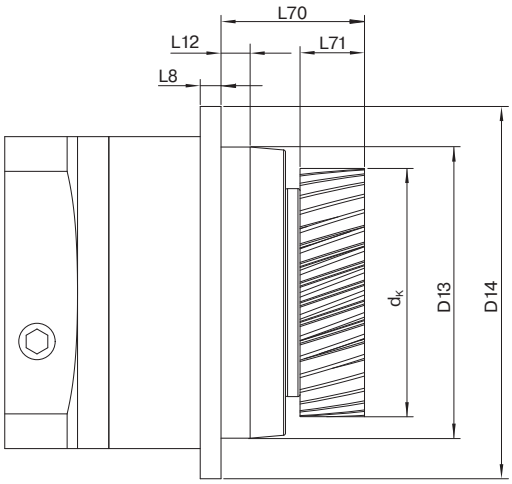

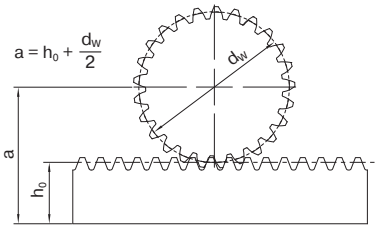

Pinion with helical teeth

Frame size	Pinion type	Module	Number of teeth	Output flange (incl.)	Tip diameter	Operating circle diameter	Center distance[1]	Output shaft length with pinion	Pinion width	Flange thickness output	Centering depth	Center diameter	Flange diameter	Mounting bore	Pitch circle diameter
		m	z		d_K	d_W	a	L70	L71	L8	L12	D13	D14	D16	D17
		mm			mm	mm	mm	mm	mm	mm	mm	mm	mm	mm	mm
064	PM1	2	26	-	60.66	56.77	50.39	45.5	26	4	10	64 h7	86	4,5 8x45°	79
	PM1	2	27	-	62.59	58.70	51.35	45.5	26	4	10	64 h7	86	4,5 8x45°	79
090	PM1	2	26	064 → 090	60.66	56.77	50.39	66	26	7	12	90 h7	118	5,5 8x45°	109
	PM1	2	27	064 → 090	62.59	58.70	51.35	66	26	7	12	90 h7	118	5,5 8x45°	109
	PM1	2	35	064 → 090	79.56	75.67	59.84	66	26	7	12	90 h7	118	5,5 8x45°	109
	PM1	2	37	-	83.81	79.92	61.96	56	26	7	12	90 h7	118	5,5 8x45°	109
110	PM1	2	26	064 → 110	60.66	56.77	50.39	65	26	8	12	110 h7	145	5,5 8x45°	135
	PM1	2	27	064 → 110	62.59	58.70	51.35	65	26	8	12	110 h7	145	5,5 8x45°	135
	PM1	2	35	064 → 110	79.56	75.67	59.84	65	26	8	12	110 h7	145	5,5 8x45°	135
	PM1	2	40	-	90.17	86.28	65.14	55	26	8	12	110 h7	145	5,5 8x45°	135
	PM1	2	45	-	100.58	96.69	70.35	55	26	8	12	110 h7	145	5,5 8x45°	135
140	PM1	2	37	090 → 140	83.81	79.92	61.96	77	26	10	14	140 h7	179	6,6 12x30°	168
	PM1	3	31	090 → 140	106.67	100.78	76.39	82	31	10	14	140 h7	179	6,6 12x30°	168
	PM1	3	35	-	119.40	113.51	82.75	69	31	10	14	140 h7	179	6,6 12x30°	168
	PM1	3	40	-	135.27	129.42	90.71	69	31	10	14	140 h7	179	6,6 12x30°	168
	PM1	4	30	-	136.77	128.92	99.46	79	41	10	14	140 h7	179	6,6 12x30°	168
200	PM1	3	35	140 → 200	119.40	113.51	82.75	100	31	12	17.5	200 h7	247	9,0 12x30°	233
	PM1	3	40	140 → 200	135.27	129.42	90.71	100	31	12	17.5	200 h7	247	9,0 12x30°	233
	PM1	4	30	140 → 200	136.77	128.92	99.46	110	41	12	17.5	200 h7	247	9,0 12x30°	233

[1] For standard toothed rack height h_0. Module 2 (h_0 = 22 mm), Module 3 (h_0 = 26 mm), Module 4 (h_0 = 35 mm).

Pinion with helical teeth

Helix angle β = -19,5283° (rising to the left)
Angle of pressure 20°
hardened and ground
Quality 6

Pinion type	Module	Number of teeth	Pitch circle diameter	Profile modification factor	Operating pitch circle diameter	Feed constant	Pinion weight	Max. torque	Max. feed force	Suitable for gearbox[1]			
	m	z	d_0	x	d_W	$d_0 \times \pi$	m_P	T_{vmax}	F_V				
	mm		mm		mm	mm/U	kg	Nm	N				
PM2	2	16	33,95	0,25	34,95	106,67	0,46	124	7300	PSFN090	PLFN090	WPSFN090	PFHE090
PM2	2	20	42,44	0,45	44,24	133,33	0,81	226	10650	PSFN110	PLFN110	WPSFN110	PFHE110
PM2	3	14	44,56	0,20	45,76	140,00	0,89	228	10230				
PM2	2	20	42,44	0,45	44,24	133,33	1,15	231	10930	PSFN140	PLFN140	WPSFN140	–
PM2	3	17	54,11	0,45	56,81	170,00	3,16	349	12930				
PM2	3	17	54,11	0,45	56,81	170,00	1,41	349	12930	PSFN200	PLFN200	–	–
PM2	4	20	84,88	0,40	88,08	266,67	4,47	1279	30140				

Pinion with straight teeth

Helix angle β = 0°
Angle of pressure 20°
hardened and ground
Quality 6

Pinion type	Module	Number of teeth	Pitch circle diameter	Profile modification factor	Operating pitch circle diameter	Feed constant	Pinion weight	Max. torque	Max. feed force	Suitable for gearbox[1]			
	m	z	d_0	x	d_W	$d_0 \times \pi$	m_P	T_{vmax}	F_V				
	mm		mm		mm	mm/U	kg	Nm	N				
PM2	2	17	34,00	0,20	34,80	106,81	0,45	98	5780	PSFN090	PLFN090	WPSFN090	PFHE090
PM2	2	22	44,00	0,40	45,60	138,23	0,82	194	8840	PSFN110	PLFN110	WPSFN110	PFHE110
PM2	3	19	57,00	0,40	59,40	179,07	1,46	275	9650	PSFN140	PLFN140	WPSFN140	–
PM2	4	22	88,00	0,20	89,60	276,46	4,54	847	19260	PSFN200	PLFN200	–	–
PM2	5	19	95,00	0,20	97,00	298,45	5,41	1304	27460				

[1] Application specific configuration with NCP.
More information about the gearboxes can be found on the product pages or at www.neugart.com

Frame size 090 and 110

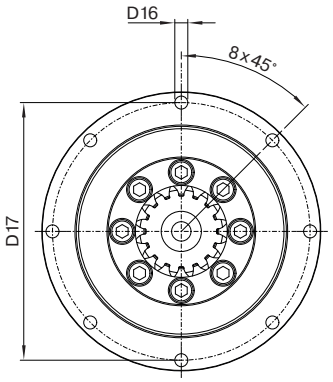

Frame size 140 and 200

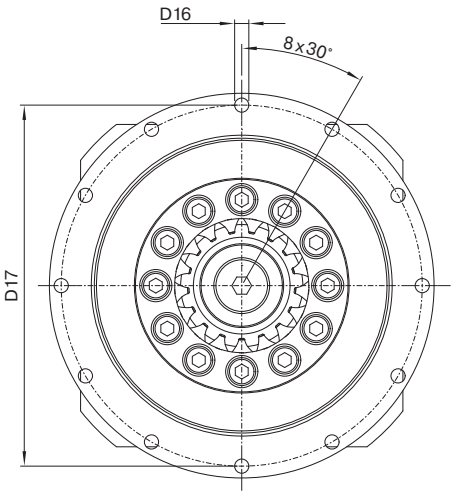

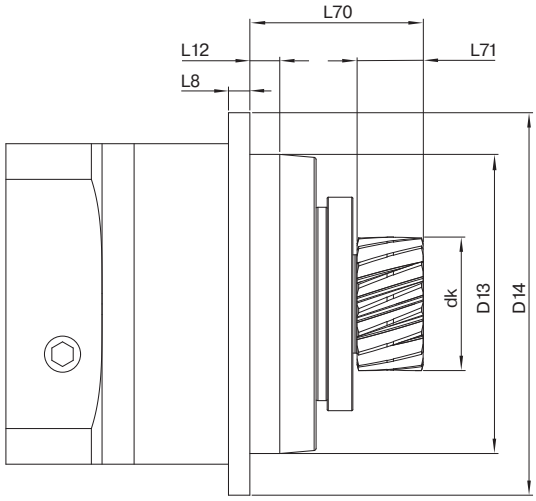

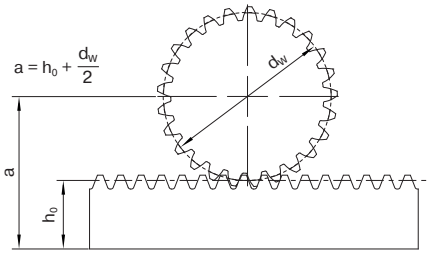

Pinion with helical teeth

Gearbox Frame size	Pinion type	Module	Number of teeth	Tip diameter	Operating pitch circle diameter	Center dis-tance[1]	Output shaft length with pinion	Pinion width	Centering depth	Flange thickness output	Pitch circle diameter	Mounting bore	Cente-ring diameter	Flange cross section
		m	z	dK	dW	a	L70	L71	L12	L8	D17	D16	D13	D14
		mm		mm	mm	mm	mm	mm	mm	mm	mm	mm	mm	mm
090	PM2	2	16	38,87	34,95	39,48	66,45	26	12	7	109	5,5 8x45°	90 h7	118
110	PM2	2	20	48,16	44,24	44,12	67,45	26	12	8	135	5,5 8x45°	110 h7	145
110	PM2	3	14	51,68	45,76	43,88	72,45	31	12	8	135	5,5 8x45°	110 h7	145
140	PM2	2	20	48,16	44,24	44,12	77,45	26	14	10	168	6,6 12x30°	140 h7	179
140	PM2	3	17	62,70	56,81	49,41	101,00	31	14	10	168	6,6 12x30°	140 h7	179
200	PM2	3	17	62,70	56,81	49,41	83,00	31	17,5	12	233	9,0 12x30°	200 h7	247
200	PM2	4	20	95,97	88,08	64,04	111,00	41	17,5	12	233	9,0 12x30°	200 h7	247

Pinion with straight teeth

Gearbox Frame size	Pinion type	Module	Number of teeth	Tip diameter	Operating pitch circle diameter	Center dis-tance[1]	Output shaft length with pinion	Pinion width	Cen-tering depth	Flange thickness output	Pitch circle diameter	Mounting bore	Cente-ring diameter	Flange cross section
		m	z	dK	dW	a	L70	L71	L12	L8	D17	D16	D13	D14
		mm		mm	mm	mm	mm	mm	mm	mm	mm	mm	mm	mm
090	PM2	2	17	38,72	34,80	39,40	66,45	26	12	7	109	5,5 8x45°	90 h7	118
110	PM2	2	22	49,52	45,60	44,80	67,45	26	12	8	135	5,5 8x45°	110 h7	145
140	PM2	3	19	65,29	59,40	50,70	83,00	31	14	10	168	6,6 12x30°	140 h7	179
200	PM2	4	22	97,49	89,60	64,80	111,00	41	17,5	12	233	9,0 12x30°	200 h7	247
200	PM2	5	19	106,89	97,00	67,50	121,00	51	17,5	12	233	9,0 12x30°	200 h7	247

[1] For standard toothed rack height h_0. Module 2 (h_0 = 22 mm), Module 3 (h_0 = 26 mm), Module 4 (h_0 = 35 mm), Module 5 (h_0 = 34 mm).